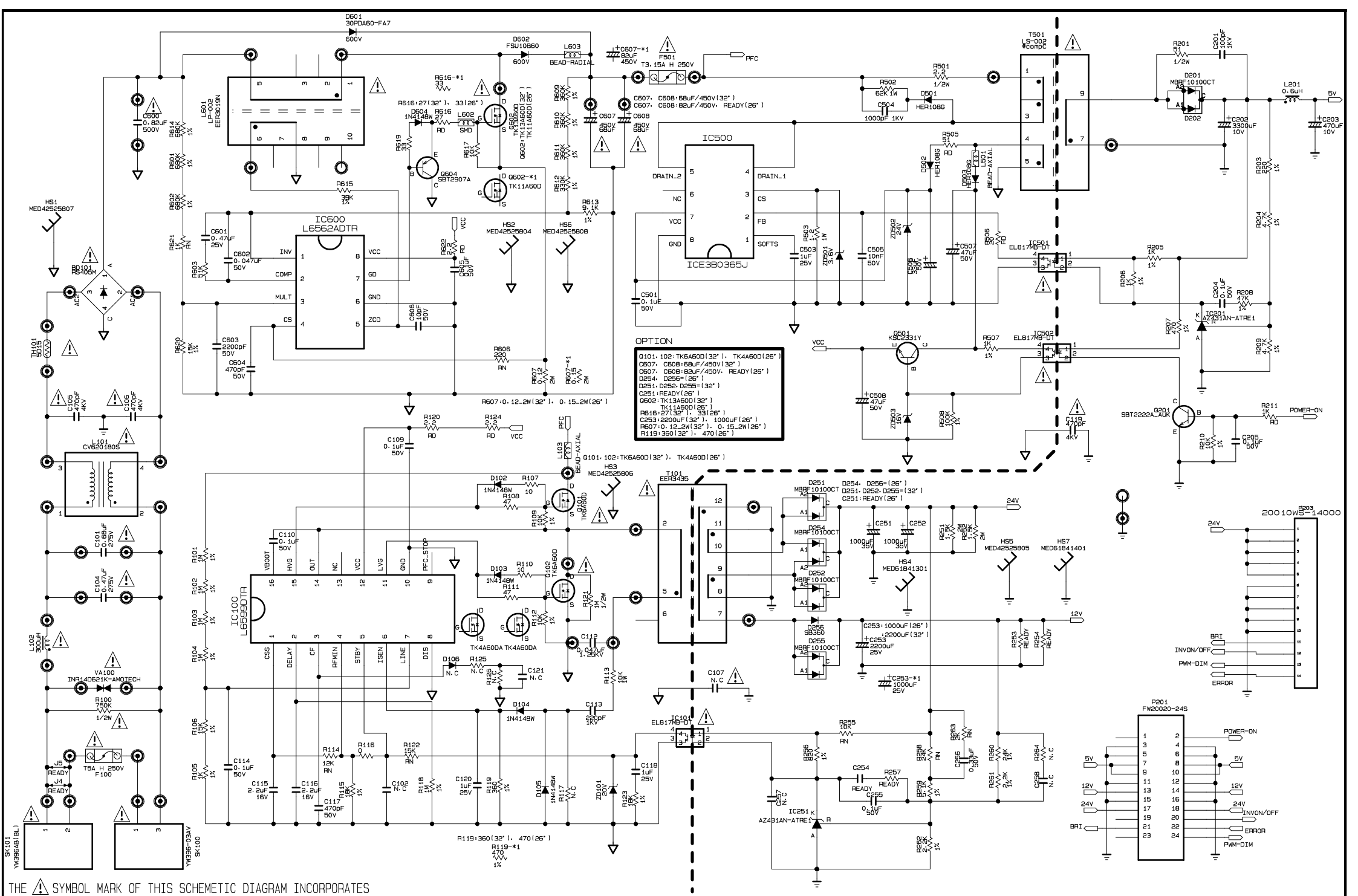


THE ⚠ SYMBOL MARK OF THIS SCHEMETIC DIAGRAM INCORPORATES SPECIAL FEATURES IMPORTANT FOR PROTECTION FROM X-RADIATION. FILRE AND ELECTRICAL SHOCK HAZARDS, WHEN SERVICING IF IS ESSENTIAL THAT ONLY MANUFATURES SPECFIED PARTS BE USED FOR THE CRITICAL COMPONENTS IN THE ⚠ SYMBOL MARK OF THE SCHEMETIC.

SECRET

LGElectronics

LG ELECTRONICS

| | | | |
|---|---|---|---|
| MODEL | 09P LCD2632 | DATE | 09. 1. 12 |
| BLOCK | Rev 1.0 | SHEET | 1 / 1 |